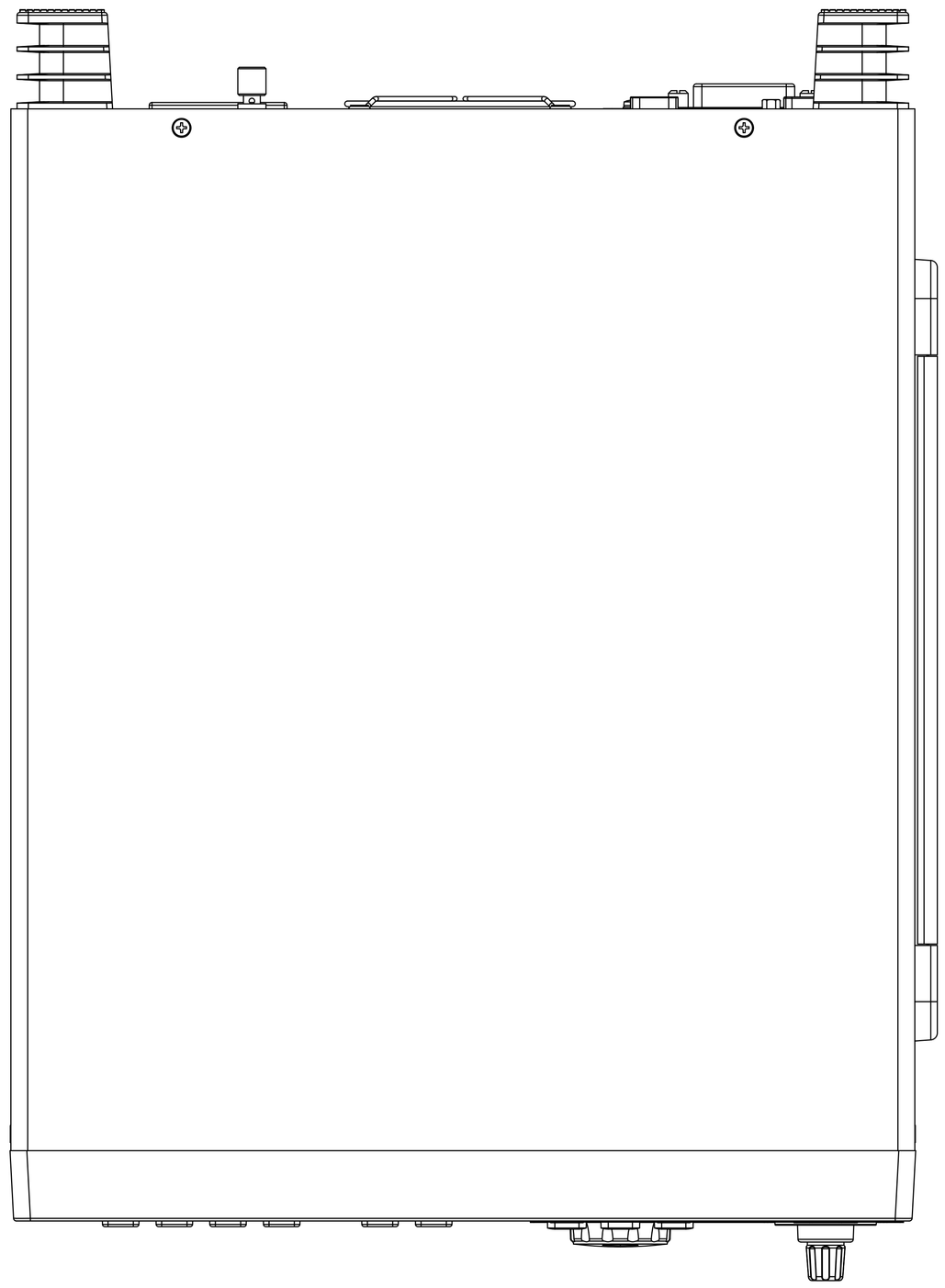

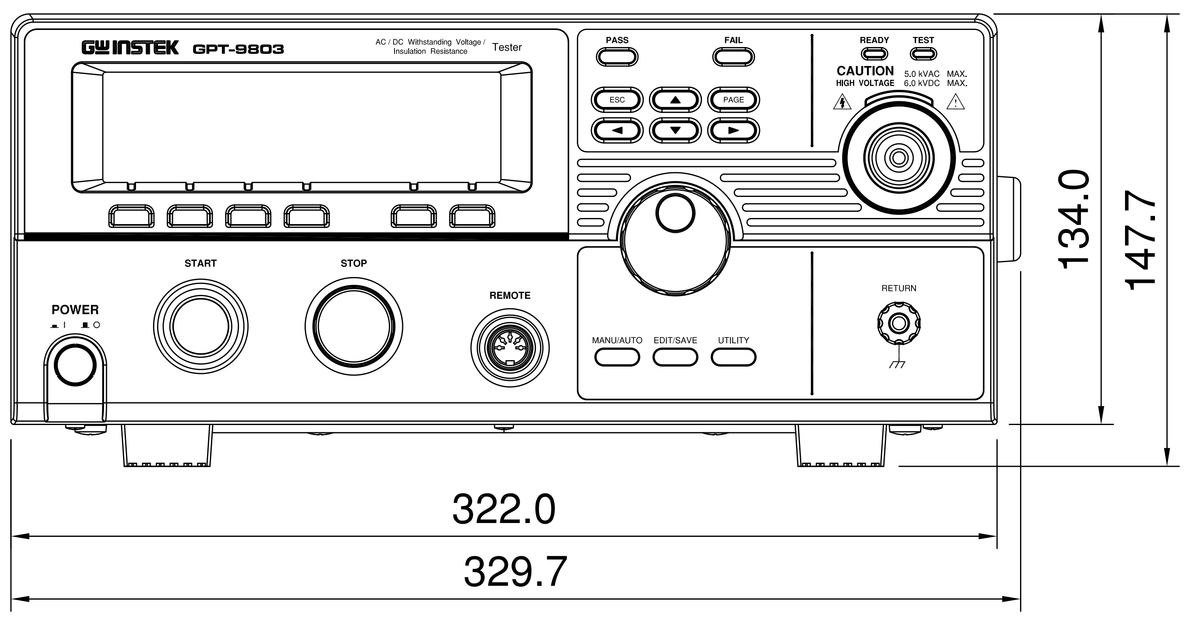
GW INSTEK GPT-9803
AC / DC Withstanding Voltage / Insulation Resistance Tester
PASS
FAIL
READY
TEST
CAUTION
HIGH VOLTAGE
5.0 kVAC MAX.
5.0 kVDC MAX.
ESC
PAGE
POWER
START
STOP
REMOTE
MANU/AUTO
EDIT/SAVE
UTILITY
RETURN
134.0
147.7
322.0
329.7

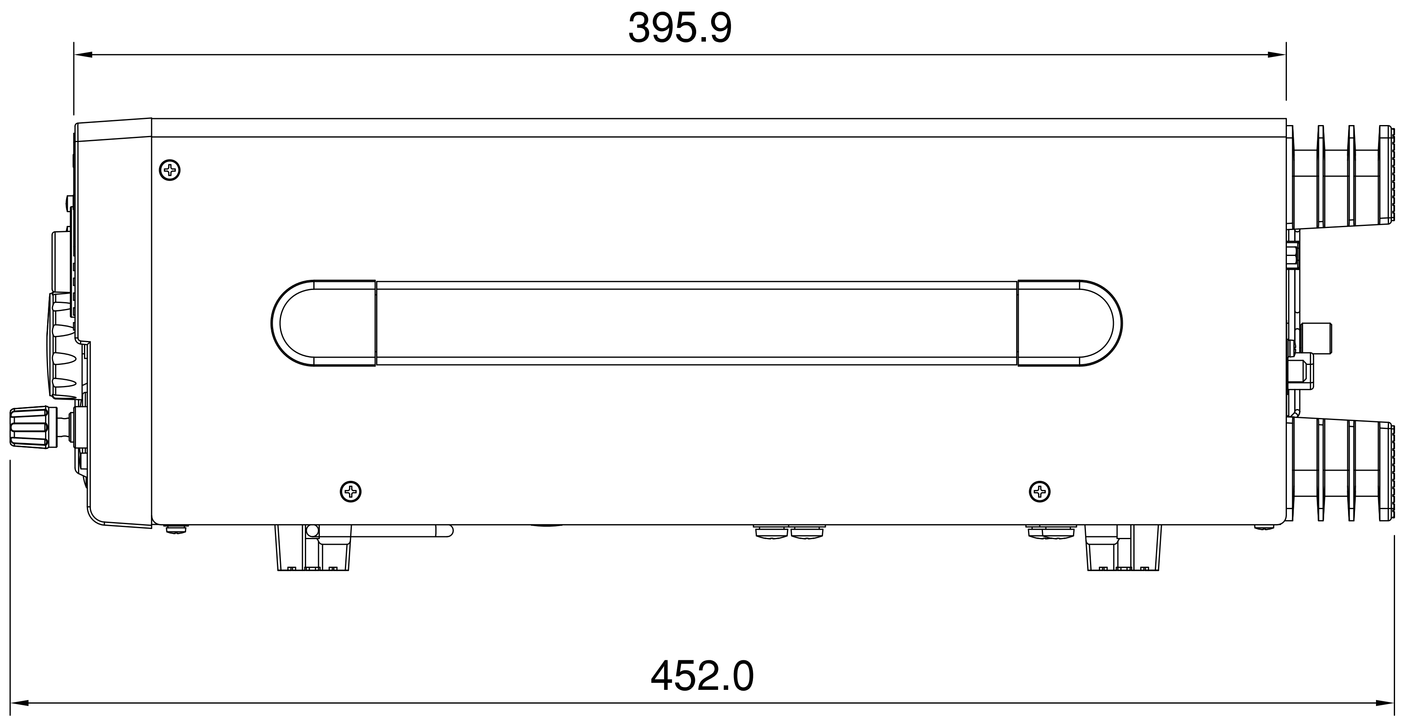
395.9
452.0