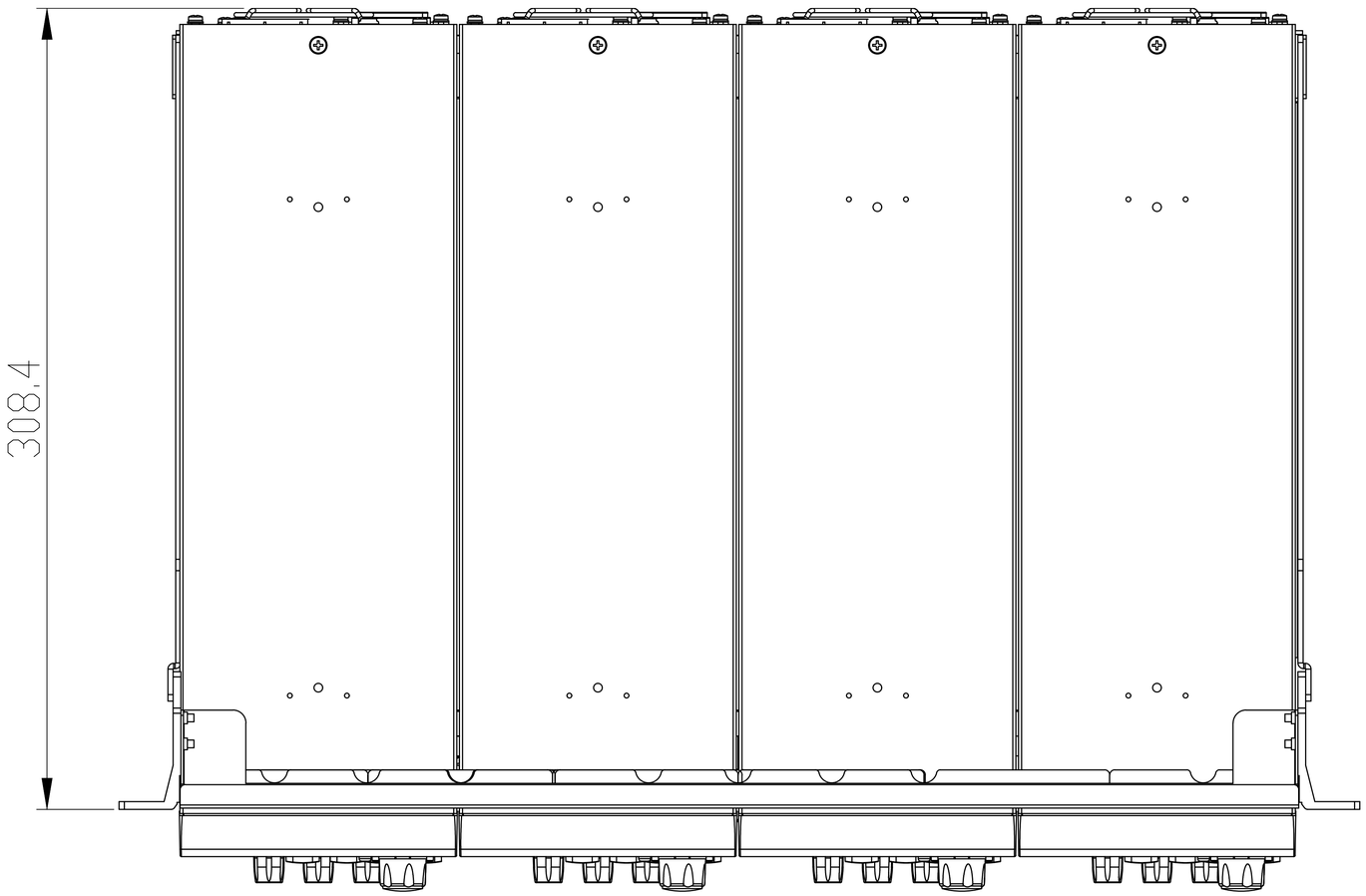
308.4

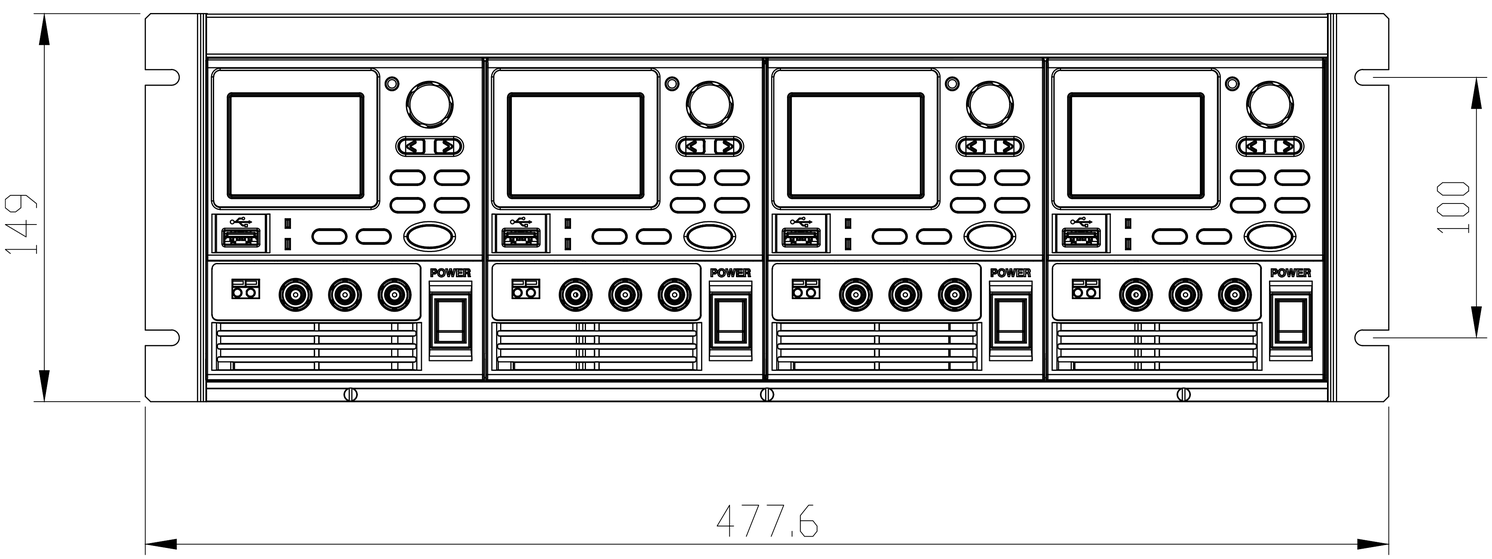
POWER
POWER
POWER
POWER
149
100
477.6

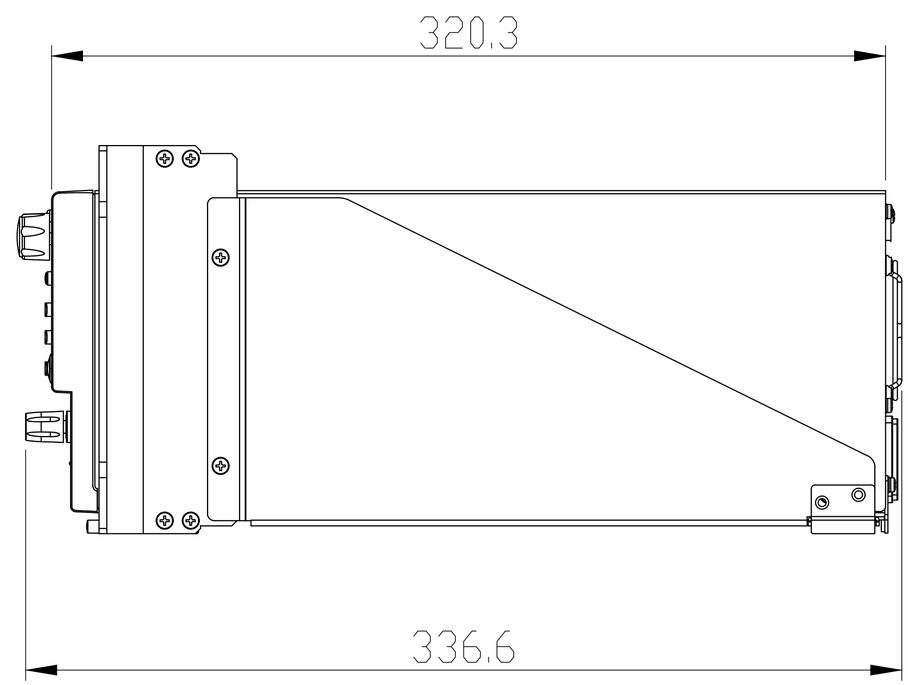
320.3
336.6