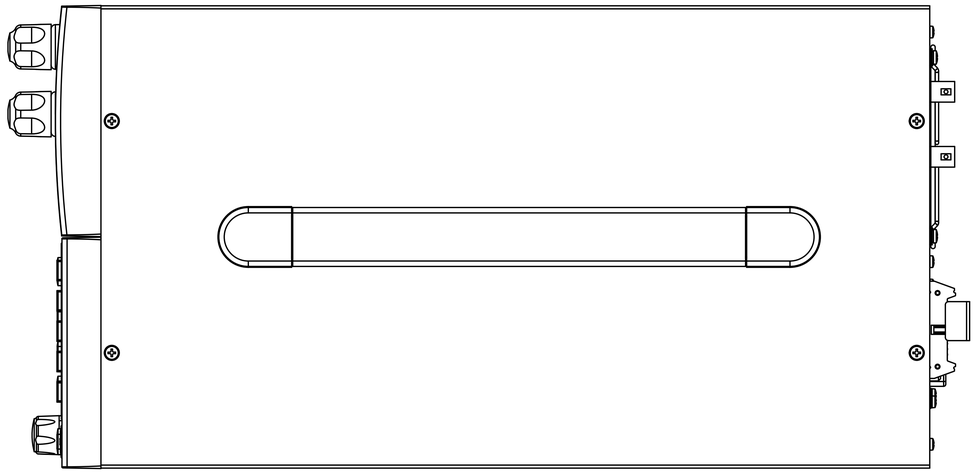

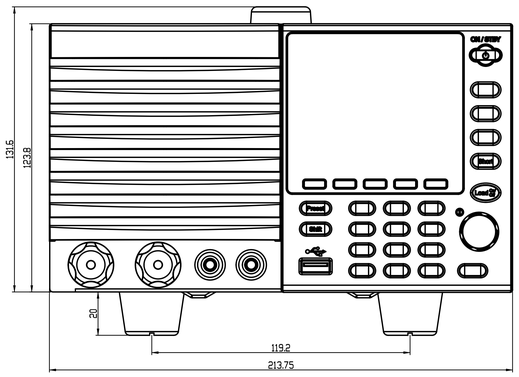
131.6
123.8
20
119.2
213.75
ON / OFF
Preset
Shift
Local

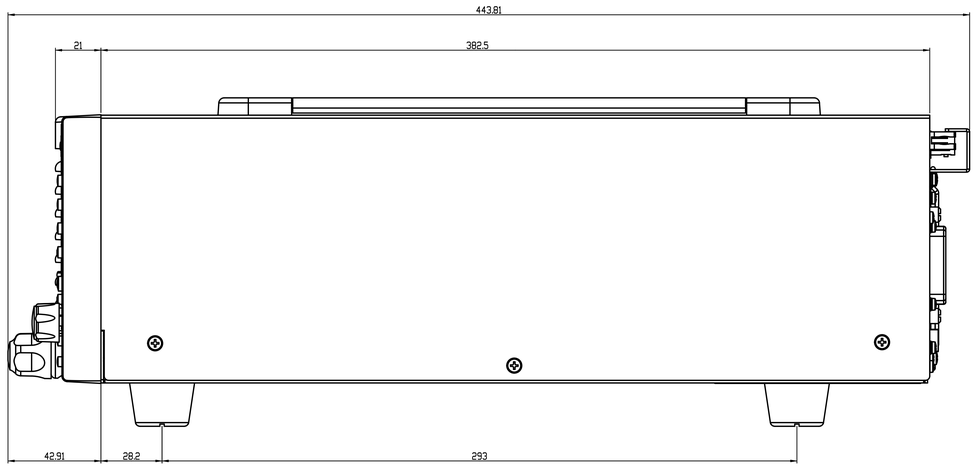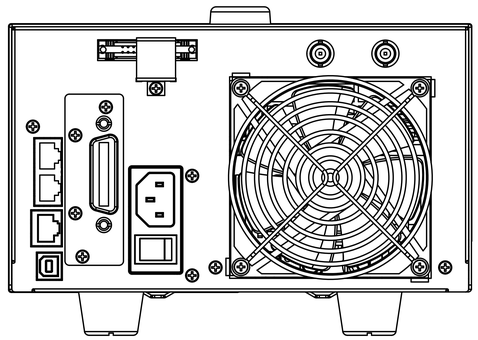
443.81
21
382.5
42.91
28.2
293